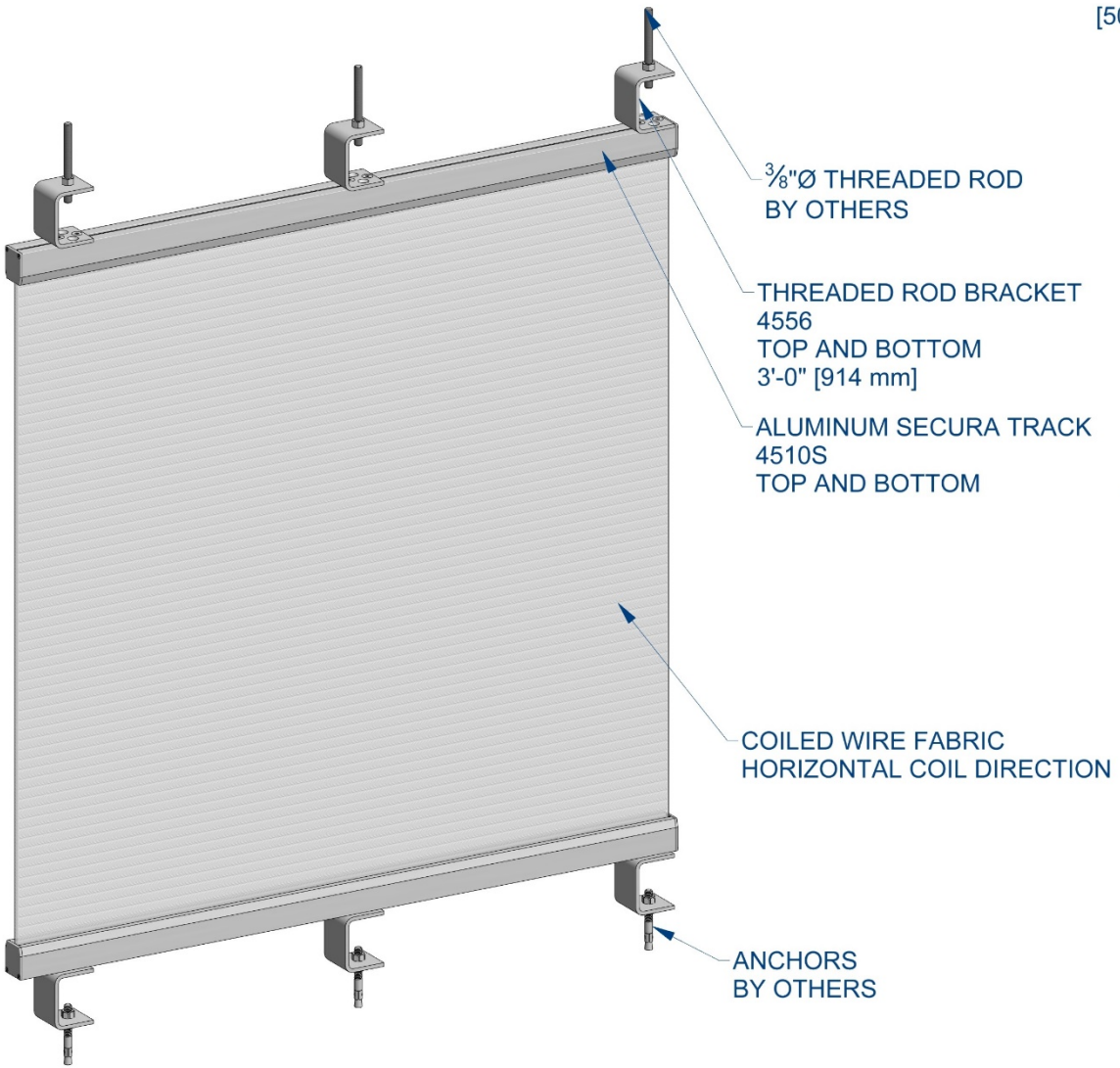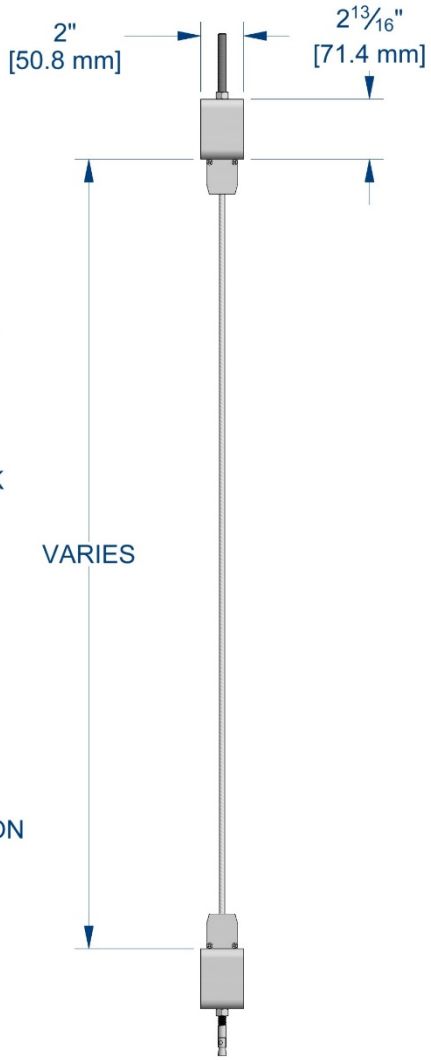Sleeve - Secura with Threaded Rod Suspension Brackets Top and Bottom